JUNIOR CH

Pressure Regulator

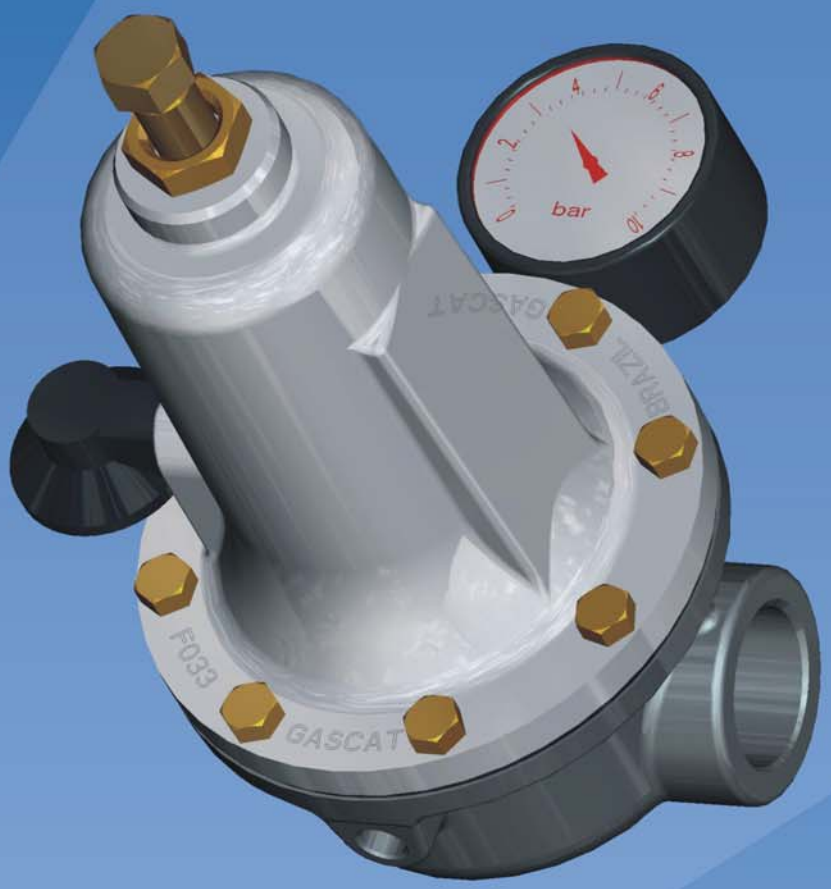

GASCAT

INTRODUCTION

The new JUNIOR CH is based on many years of experience of the former JUNIOR family regulators. It is a field regulator or also a first stage regulator that combines the very simplicity design and rugged construction to control these first reduction stages in the wide and diversified industrial process applications.

FEATURES

Can be used in any gas application whereas compatible with material or any liquid application as well.

Very simply maintenance; it is possible to change all pieces without removing the body from pipe line. Checking the valve and shutter is one tool and 2 minutes job by removing the bottom screw.

Tight shutoff performance: a flat face disc of Buna-N or Viton or any others soft elastomers required provides excellent bubble tight seal.

Easy to install: the regulator can be work in any position like vertical, horizontal or upside-down.

It comes along with gauge avoiding additional work of gauge installations on pipes.

Versatility: the new JUNIOR CH is available in three different materials: Carbon Steel, Cooper Alloy (clean for Oxygen application) and Stainless Steel. The flanged type can be supplied under request.

PRINCIPLE OF OPERATION

The internal registration pressure is registered under the diaphragm trough the same passage of gas outlet flows. When the downstream pressure is coming to be above the set pressure the diaphragm moves up releasing the stem and shutter goes up and move the disc up against the seat and breaking of the flow through the regulator. When the demand is open or increase, downstream pressure drops allowing the spring to extend moving all parts down and the disc away from the seat allowing flow through the consumption.

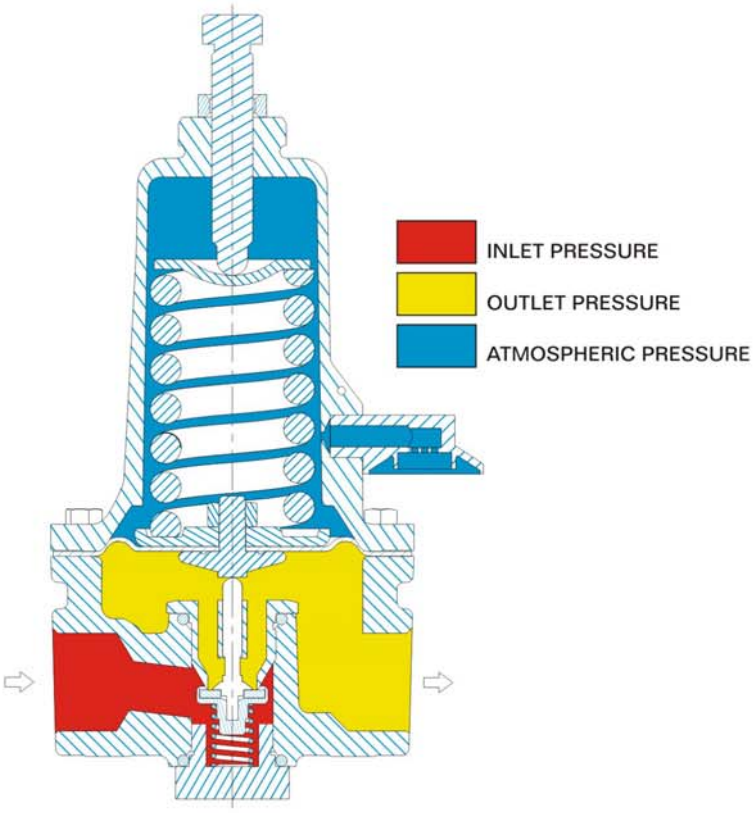

PRINCIPLE OF OPERATION

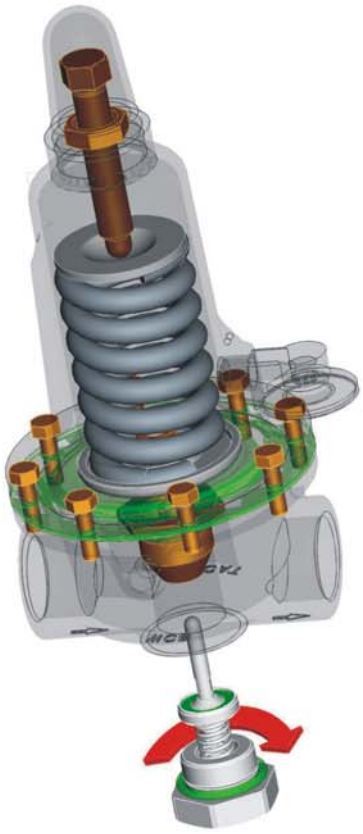

CHECK & CLEAN
INTERNALS (2 min.)

TECHNICAL DATA

- Maximun inlet pressure: 20 bar
- Outlet pressure: 0,2 to 12 bar
- Operation temperature: -10º to 65ºC
- Nominal diameter: 3/4" and 1"
- Orifice diameter: 15 mm
- Gauges: 0 to 4 bar
  0 to 10 bar
  0 to 25 bar
- Materials:
  Body: Carbon Steel / Stainless Steel / Brass
  Top Cover: Aluminum
  Internals: Brass / Stainless Steel
  Diaphragm: Buna N / Viton

SPRING RANGES

SPRING COLOR	SPRING RANGES (BAR)	MAXIMUM INLET PRESSURE (BAR)
CADMIUM	0,3 - 1,2 BAR	10,0
WHITE	1,0 - 3,0 BAR	16,0
BROWN	3,0 - 7,0 BAR	18,0
GREY	5,0 - 12,0 BAR	20,0

FLOW CAPACITIES (Nm3/h of Air)

	OUTLET PRESSUE (bar)	INLET PRESSURE (bar)										
		1	2	4	6	8	10	12	14	16	18	20
Cadmium Spring 0,3 - 1,2 bar	0,3	37	56	90	120	120	120					
	0,4	40	58	93	125	125	130					
	0,5	42	62	95	130	130	135					
	0,4	32	58	93	110	112	125					
	0,6	18	62	98	140	144	144					
	0,8	10	60	110	160	162	162					
	1,0		60	80	160	176	176					
	1,2		60	114	190	190	190					
White Spring 1,0 - 3,0 bar	1,0		80	120	150	160	160	160	160	160		
	2,0			140	220	230	230	230	230	230		
	3,0			70	220	230	240	240	240	240		
Brown Spring 3,0 - 7,0 bar	3,0				140	260	260	260	260	260	260	
	4,0				140	260	290	290	290	290	290	
	6,0					260	290	300	300	300	300	
Gray Spring 5,0 - 12,0 bar	5,0					240	240	300	320	400	400	400
	7,0						260	300	320	400	420	420
	10,0							260	360	420	420	420
	12,0								360	420	420	420

GASCAT
Indústria e Comércio Ltda.

COMPONENTS DESCRIPTION

POSITION	DESCRIPTION
1	REGULATE SCREW
2	NUT LOCK
3	UPPER COVER
4	SPRING SUPPORT
5	REGULATE SPRING
6	RELIEF
7	HEXAGONAL NUT
8	PLATE SUPPORT
9	DIAPHRAGM SCREW
10	HEXAGONAL NUT
11	DIAPHRAGM
12	BODY
13	OBTURATOR STEM
14	SEAT
15	O'RING
16	OBTURATOR SEAL
17	OBTURATOR
18	OBTURATOR SPRING
19	PLUG

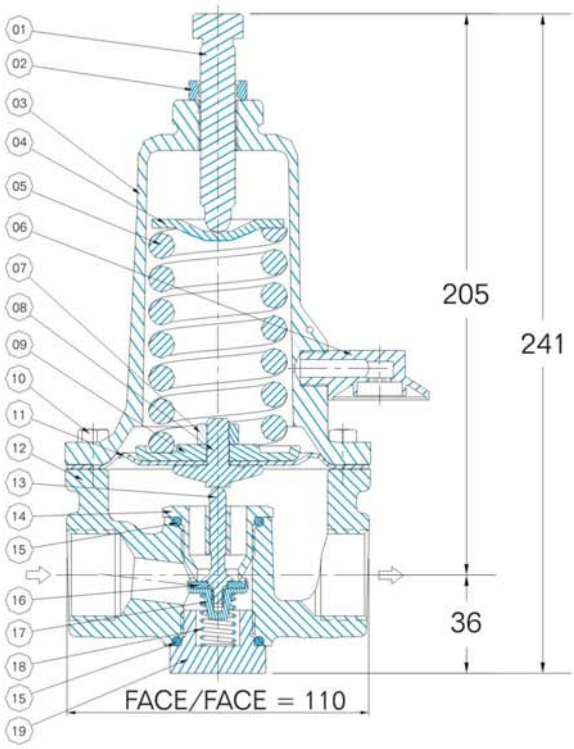

INSTALLATION

In order to have an appropriate installation, we recommend:

1. Block Valve (can be ball or other).
2. Filter (besides the regulator has a rugged construction always a filter is recommended).
3. Gauge to see the inlet pressure.
4. Pressure regulator.
5. Larger gauge in case of JUNIOR´s gauge is difficult to see.
6. Block valve (can be ball or other).

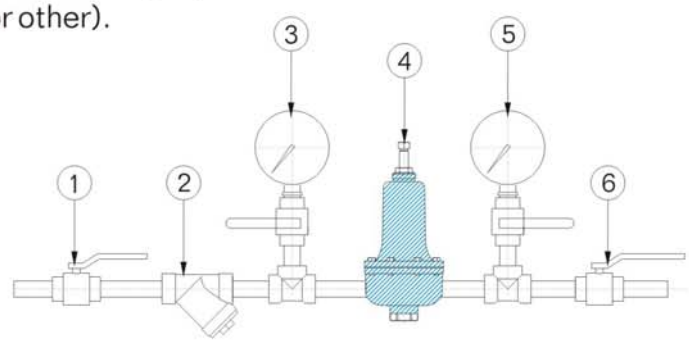

CERTIFICATIONS

ISO 9001 | ASME - U-STAMP | NATIONAL BOARD

01/2007

GASCAT
Indústria e Comércio Ltda.

Factory

Rodovia SP 73, nº 1141 - Bairro Pimenta

Indaiatuba - SP - Brazil - Zip Code 13.347-390

Phone: (55 19) 3936-9300 - Fax: (55 19) 3935-6009

http://www.gascat.com.br

e-mail: sales@gascat.com.br

Representative/Distributor

The Gascat policy is one of continuous improvement and development. The Company reserves the right to change specifications and introduce improved designs without previous notice.